http://arizanotlari.com

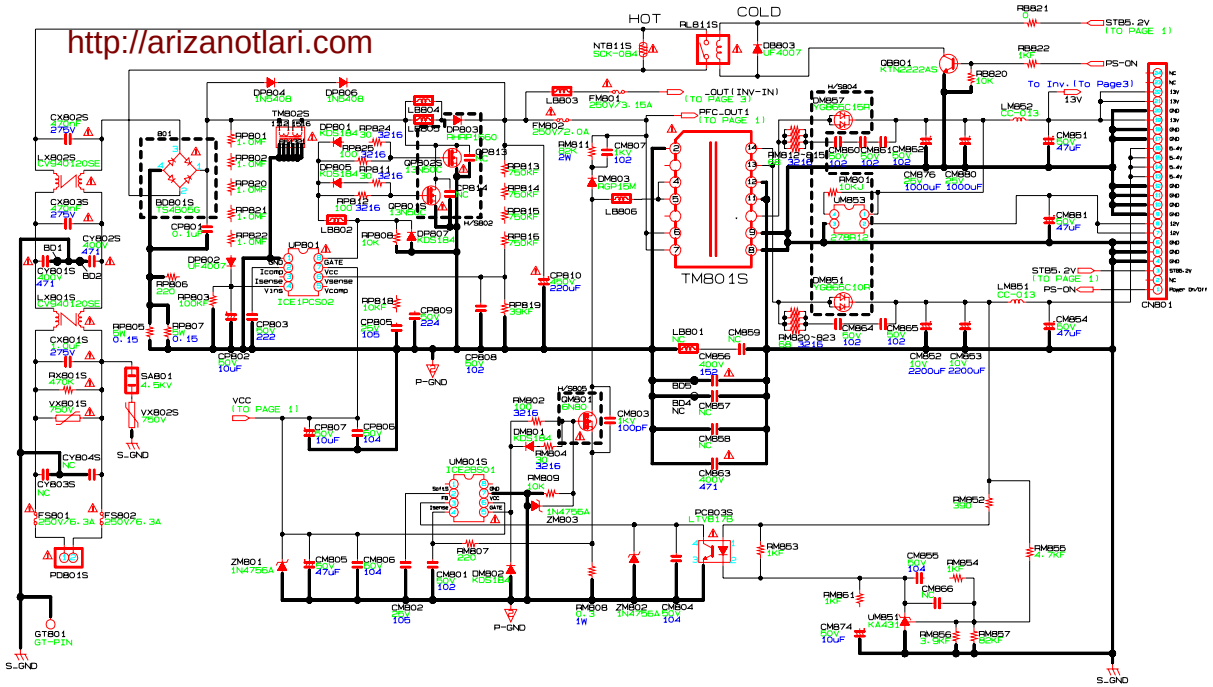

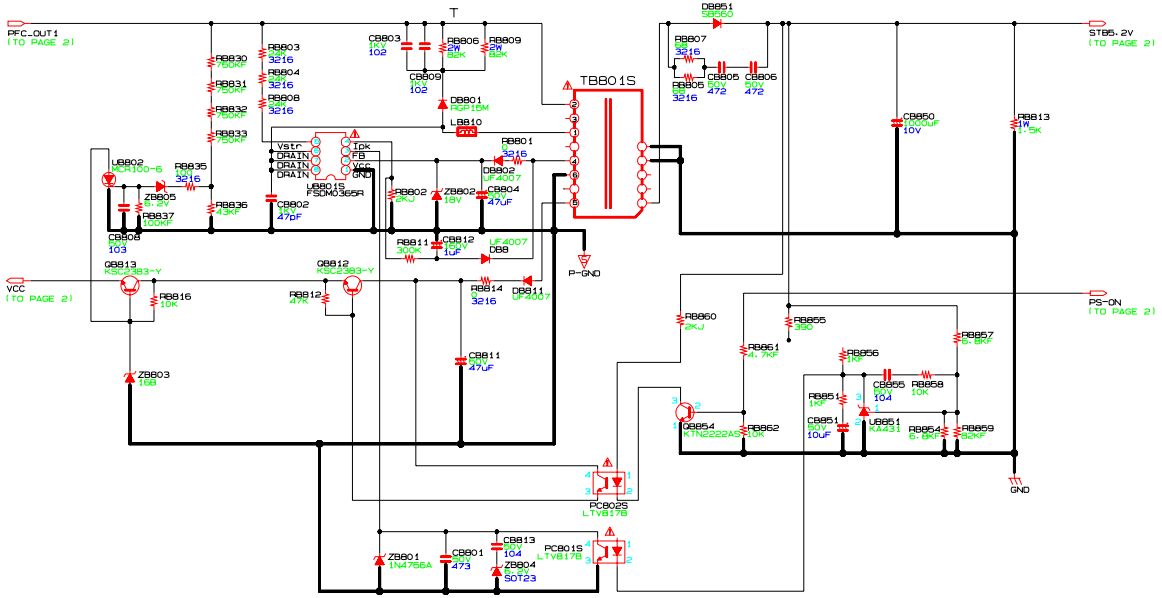

Y.T.Y 01/15/'07 - SUPER IP-BOARD PROJECT(40" Standa

K.J.D 01/15/'07 UIT DRAWN FOR NET DESIGN
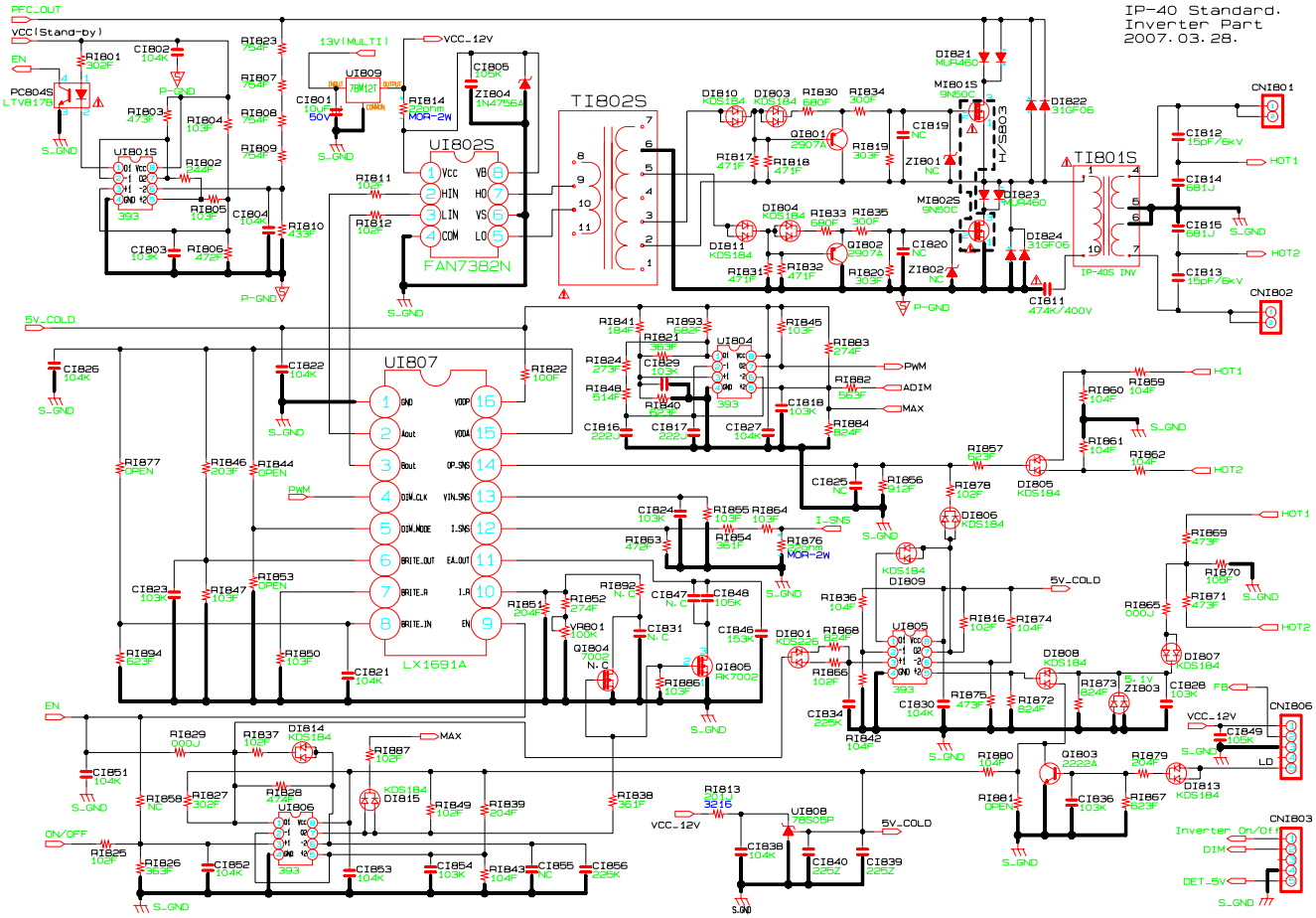
IP-40 Standard.
Inverter Part
2007.03.28.