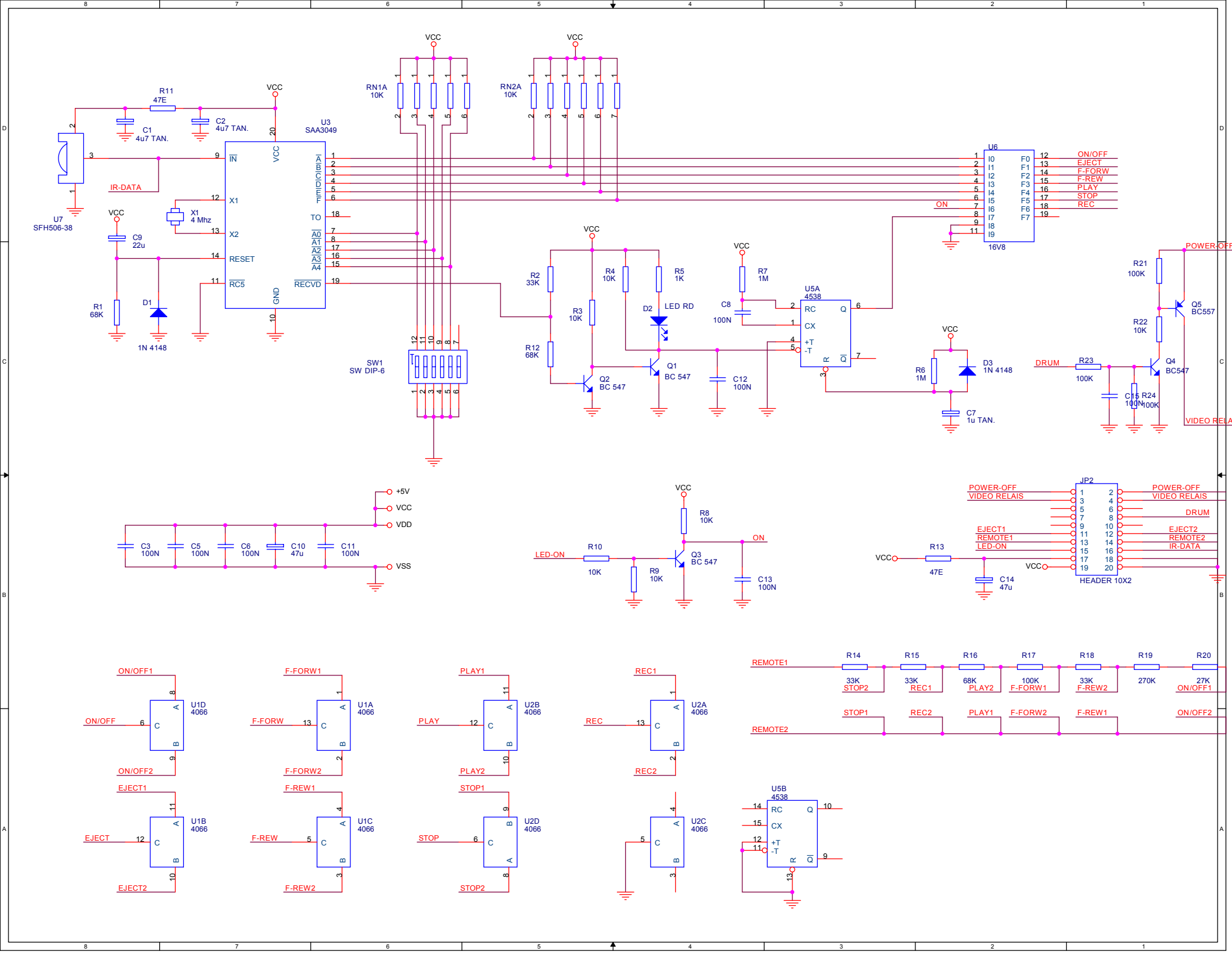
U3
SAA3049
U7
SFH506-38
IR-DATA
R11
47E
C1
4u7 TAN.
C2
4u7 TAN.
X1
4 Mhz
C9
22u
R1
68K
D1
1N 4148
RN1A
10K
RN2A
10K
SW1
SW DIP-6
U6
16V8
ON/OFF
EJECT
F-FORW
F-REW
PLAY
STOP
REC
ON
R2
33K
R3
10K
R4
10K
R5
1K
D2
LED RD
R12
68K
Q1
BC 547
Q2
BC 547
C12
100N
R7
1M
C8
100N
U5A
4538
R6
1M
D3
1N 4148
C7
1u TAN.
POWER-OFF
R21
100K
R22
10K
Q5
BC557
Q4
BC547
DRUM
R23
100K
C15
100N
R24
100K
VIDEO RELAIS
+5V
VCC
VDD
VSS
C3
100N
C5
100N
C6
100N
C10
47u
C11
100N
R8
10K
LED-ON
R10
10K
R9
10K
Q3
BC 547
C13
100N
JP2
HEADER 10X2
EJECT1
REMOTE1
EJECT2
REMOTE2
IR-DATA
R13
47E
C14
47u
R14
33K
STOP2
R15
33K
REC1
R16
68K
PLAY2
R17
100K
F-FORW1
R18
33K
F-REW2
R19
270K
R20
27K
ON/OFF1
STOP1
REC2
PLAY1
F-FORW2
F-REW1
ON/OFF2
U1D
4066
U1A
4066
U2B
4066
U2A
4066
U1B
4066
U1C
4066
U2D
4066
U2C
4066
U5B
4538
ON/OFF
F-FORW
PLAY
REC
EJECT
F-REW
STOP
ON/OFF2
F-FORW2
PLAY2
REC2
EJECT2
F-REW2
STOP2