13 Circuit Descriptions

13-1 Overall Block Structure

13-1-1 Power Tree

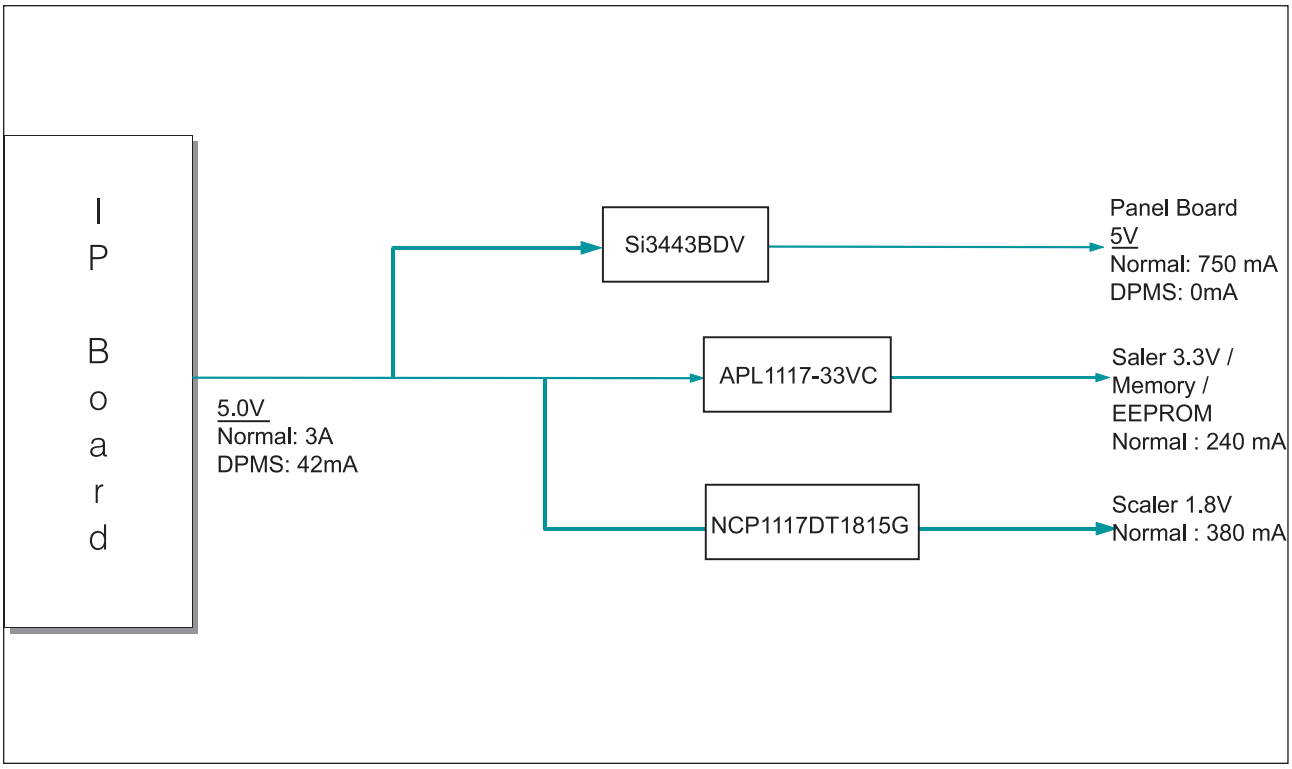

1. When the AD board is in DPMS state:
   1.1 The IP has been designed so that it operates with a power consumption of less than 0.6W of.
   1.2 The Scaler consumes power up to 37mA
   1.3 The power to the panel is switched off

2. When the AD board is operating normally:
   2.1 The maximum power consumption of the panel lamps is described below (It may vary depending on the panel manufacturer)
   4 x (7.5mA x 720mVrms)=4 x 5.4=21.6W
   2.2 The power consumption of the Panel Control board is as follows: 5V x 720mA=3.6W
   2.3 The power consumption of the Scaler is as follows: 3.3V x 245mA + 1.8V x 300mA = 1.35W

13-1-2 Main Board Parts

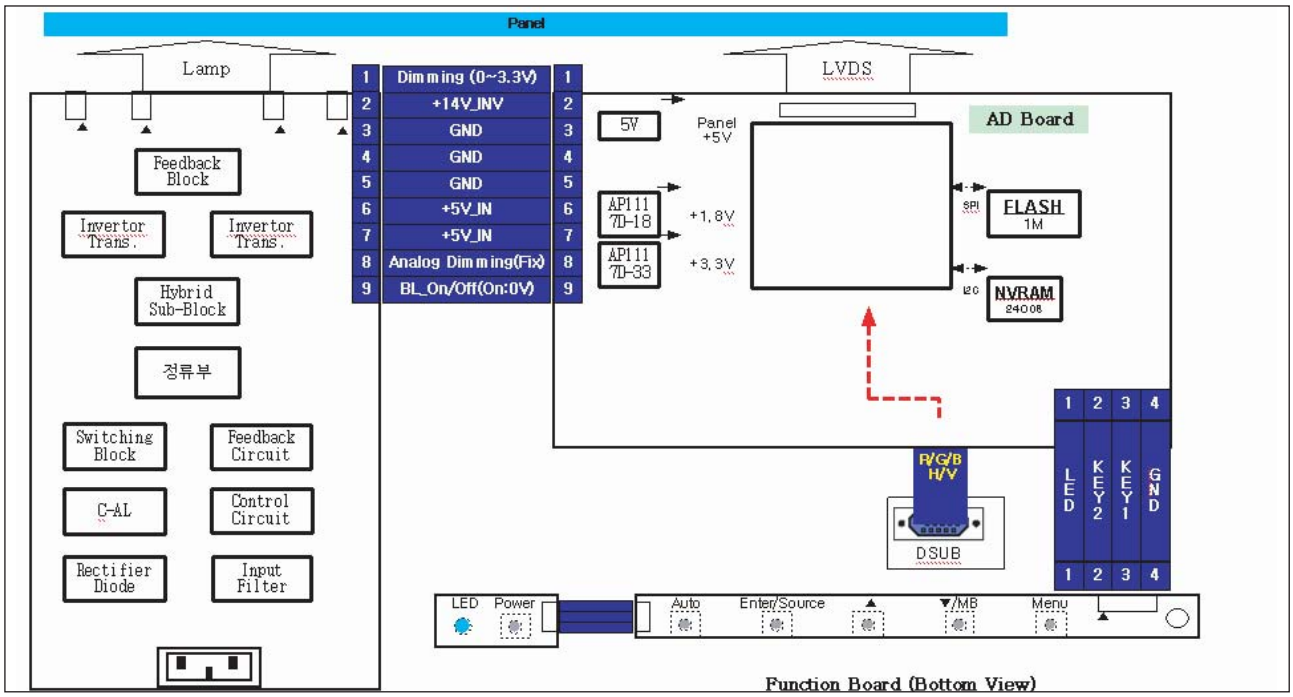

1. Inverter: A conversion device that converts DC rated voltage/current to high ones necessary for the panel lamp.

2. DC/DC(Regulator): General term for DC to DC converting devices.
   The IP board receives 5V and outputs 1.8 or 3.3V that is supplied to the scaler (SE567MRH-LF).

3. Power MosFET: The IP board receives 5V and outputs a lower voltage in DPMS mode and supplies the whole 5V for the panel operating board in normal conditions. In that case, the switching of Power MosFET is controlled by Micom.

4. Scaler: Receives the digital TMDS and analog R,G,B signals and convert them to proper resolutions using up- or down- scaling that are transferred to the panel in the LDVS formats.

5. Crystal(Oscillator): Use one 14.318MHz oscillator externally to supply power to both MCU and Scaler at the same time.

6. SCALER & EEPROM: I2C is a two-way serial bus of two lines that supports communications across the integrated circuits as well as between FLASH and EEPROM.
   In particular, FLASH and Scaler (SE567MRH-LF) use the SDR direct bus for mutual communications, which is an effective, speedy system because it allows 4 additional address/data lines compared to the old serial systems.

7. Function Key: A certain keystroke generates a certain electrical potential, which is transferred into ADC input port of the Scaler and then converted to a digital value by the A/D converter of the chip. The digital value (data) is a clue to which key is entered. In practical, the voltage levels are set as below.

13-1-3 IP BOARD BLOCK(POWER) Parts

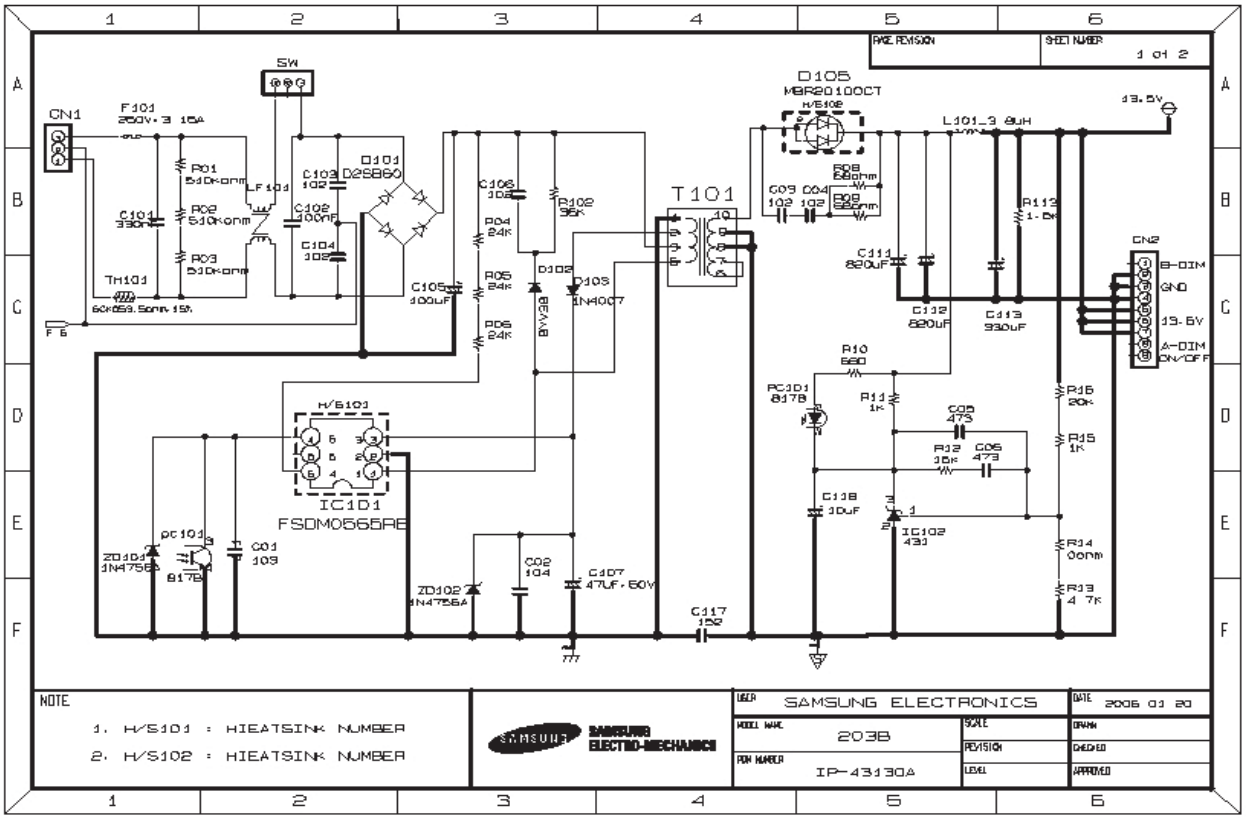

13-1-4 IP BOARD BLOCK(INVERTER) Parts

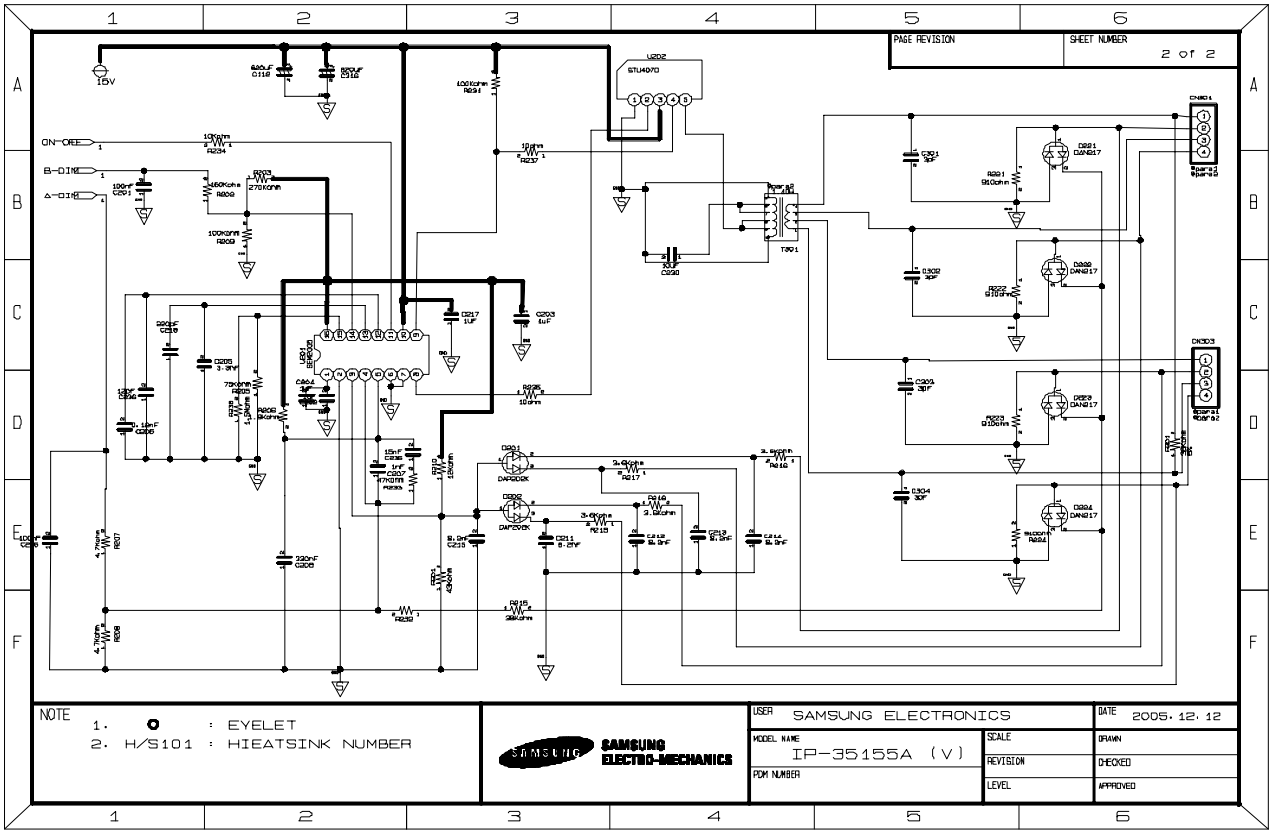

13-1-5 IP BOARD(inverter) PROTECTION Parts

PROTECTION Parts

- PROTECTION Parts are divided two parts. When lamp voltage rose as absurd and lamp feedback electric current would not be sensed. So all of the two halt IP-Board's function that prevent action the enemy more than IP-Board's continous abnormality action.
- When Trans output voltage rose as absurd, become OVP and halts IP-board's function because the divided voltage is inputted by IC(U201) 2 PIN.
- When lamp current is sensed, become OLP and halts IC because the IC(U201) 2 PIN is became under 2.5V

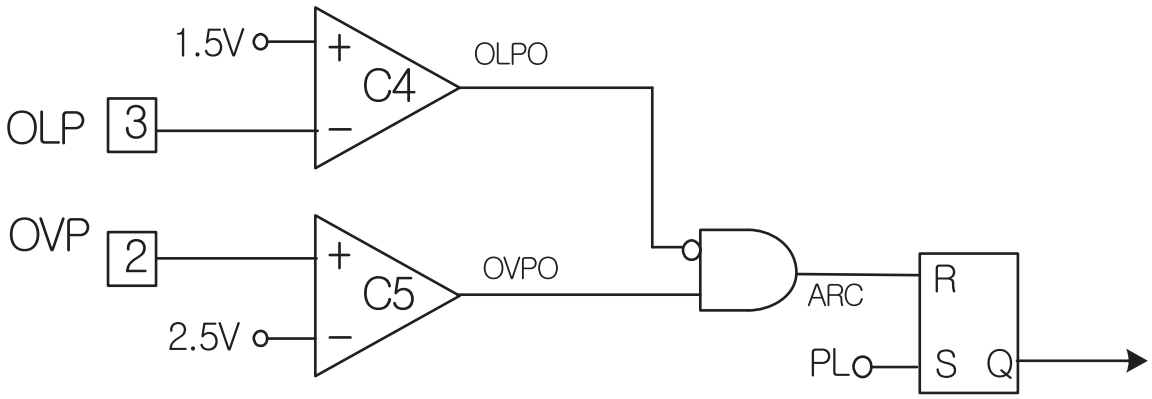

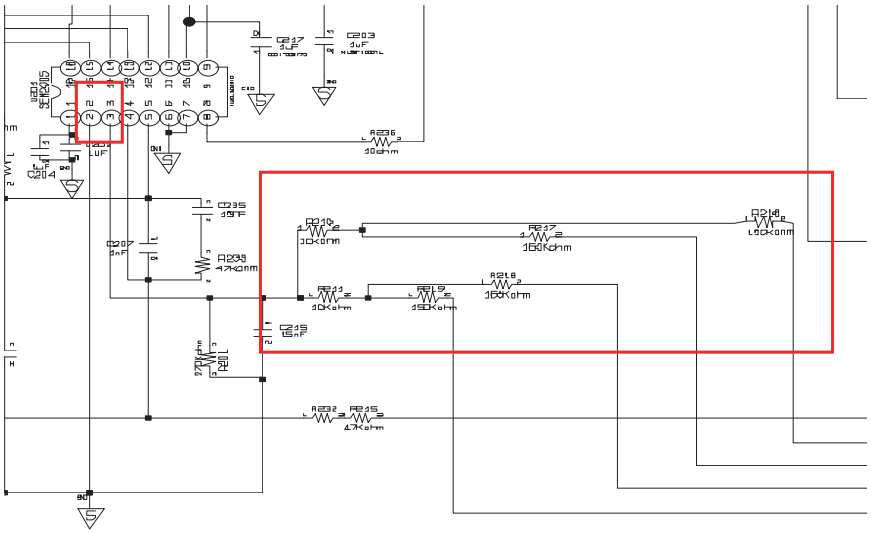

13-2 Trouble Shooting

13-2-1 IP BOARD(Power)

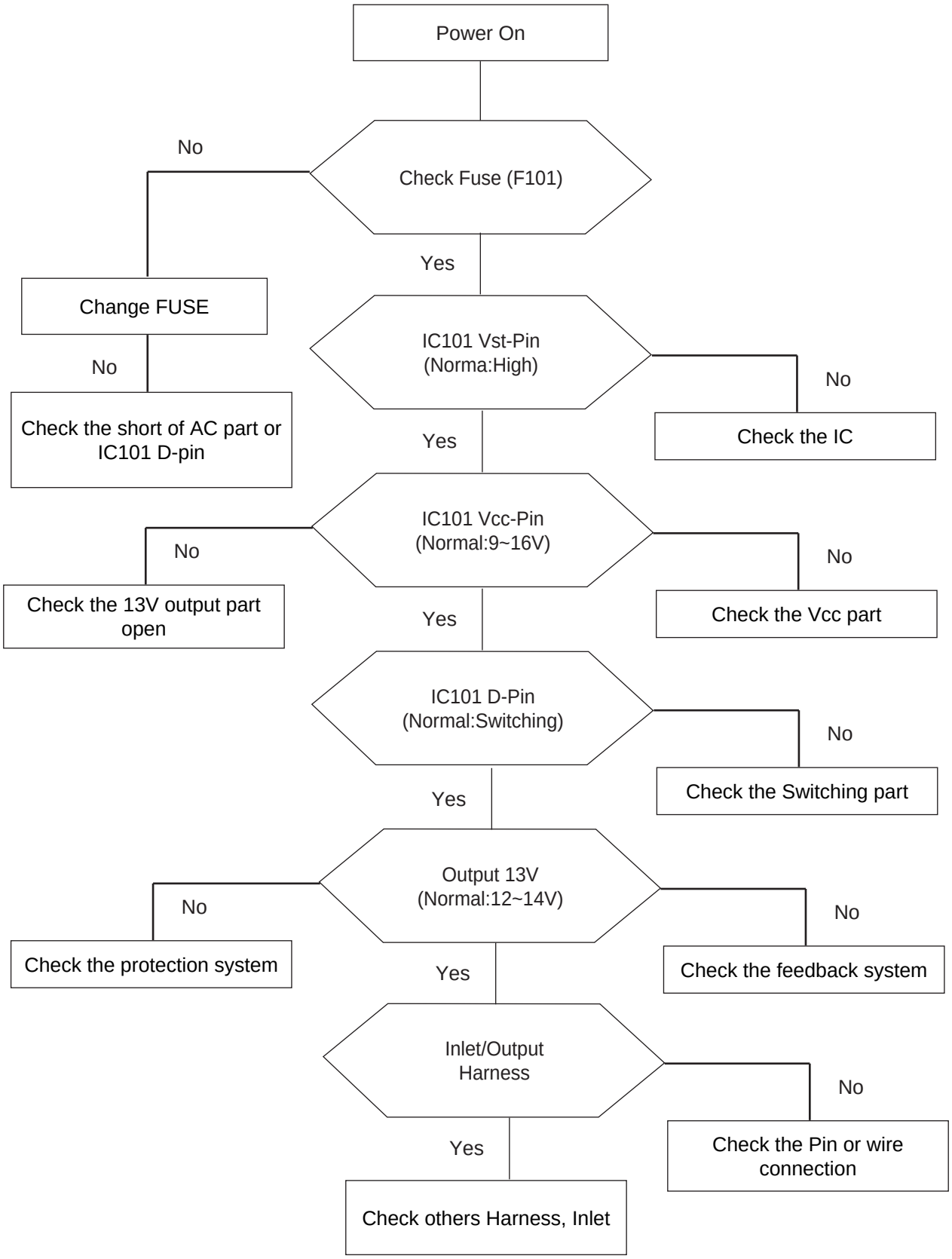

13-2-1 IP BOARD(Inverter)

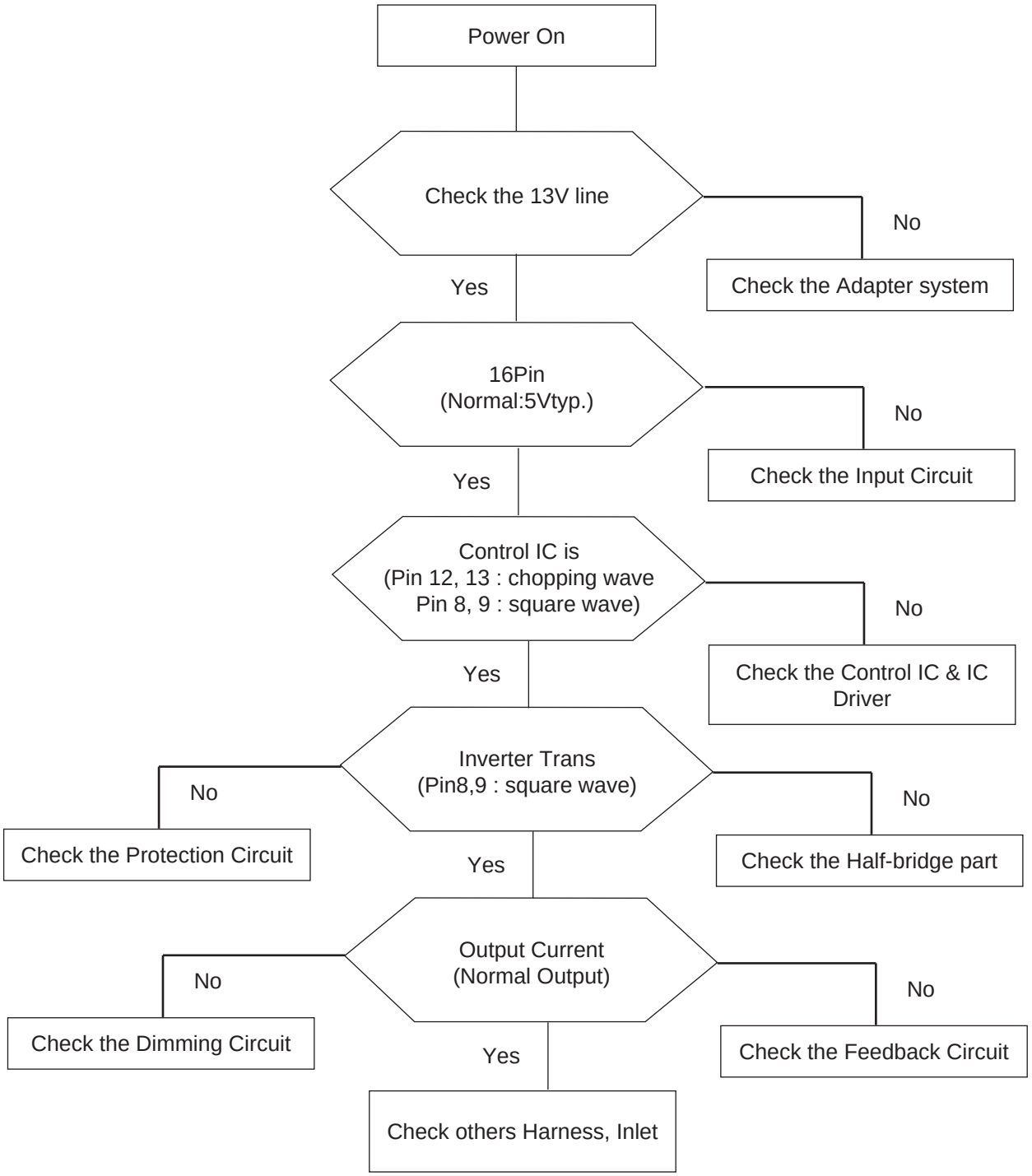

13-3 IP BOARD(Power) Schematic Diagrams

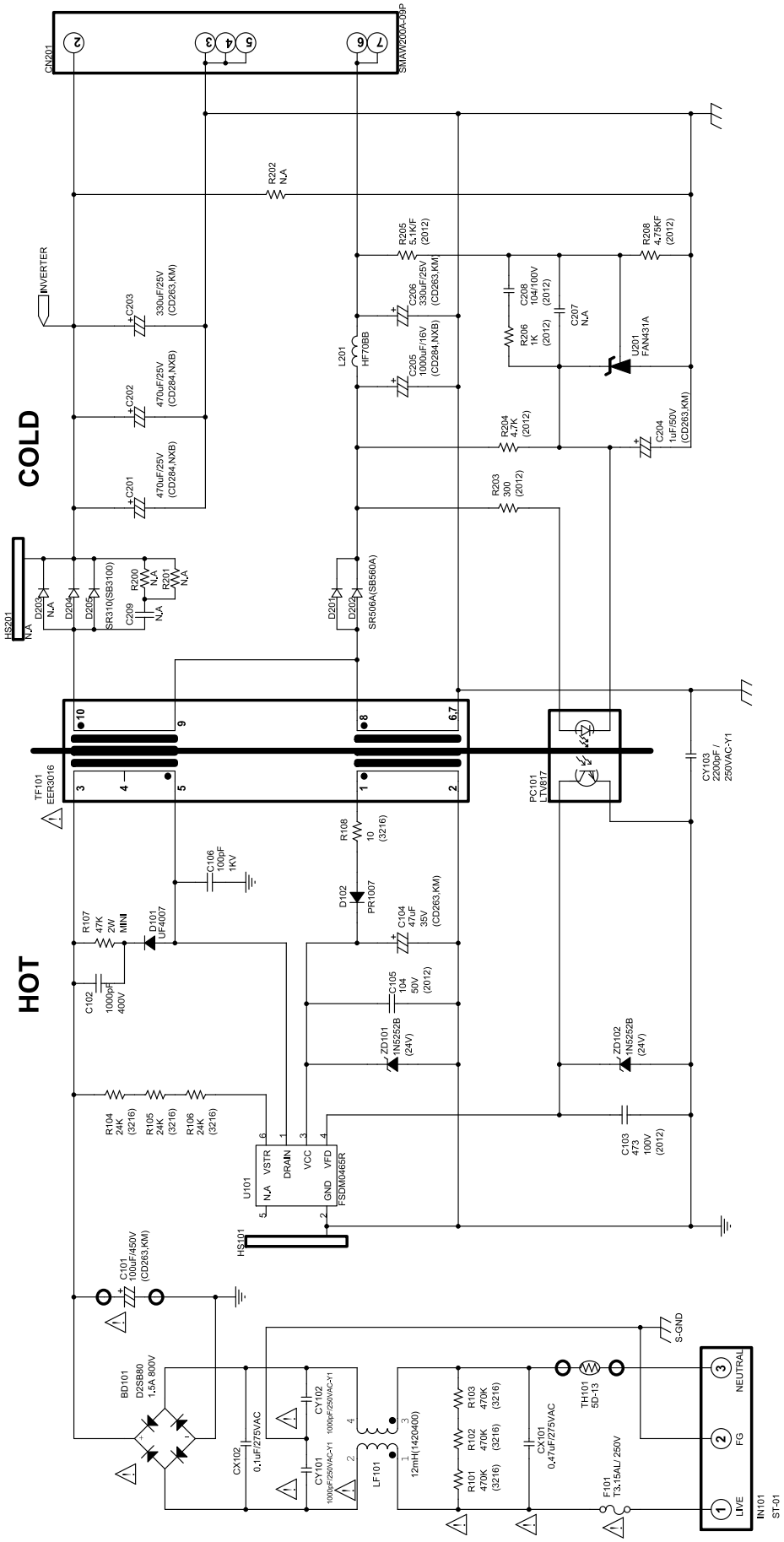
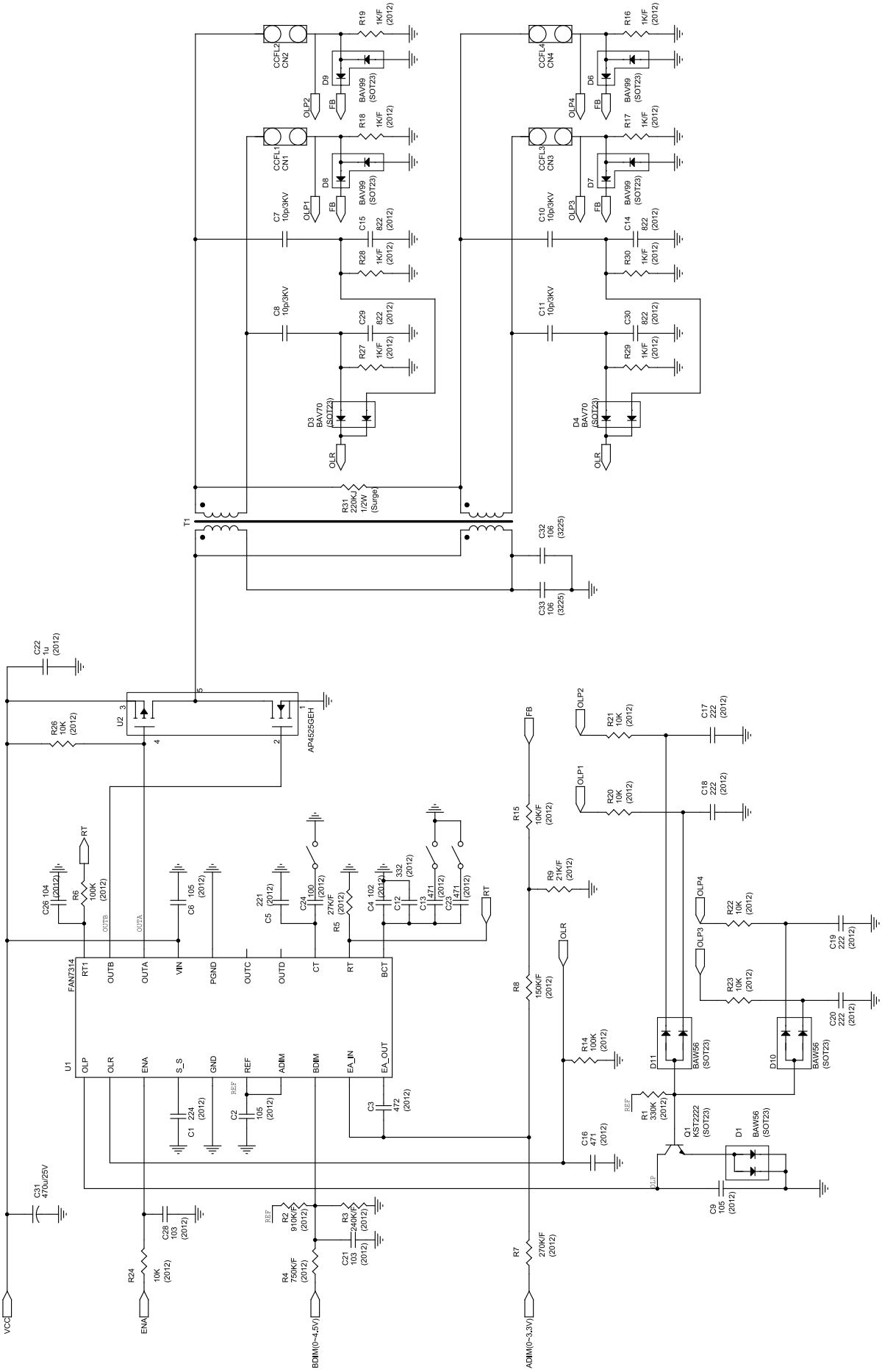
13-4 IP BOARD(Inverter) Schematic Diagrams