3.3.10 MAIN POWER ASSY SECTION

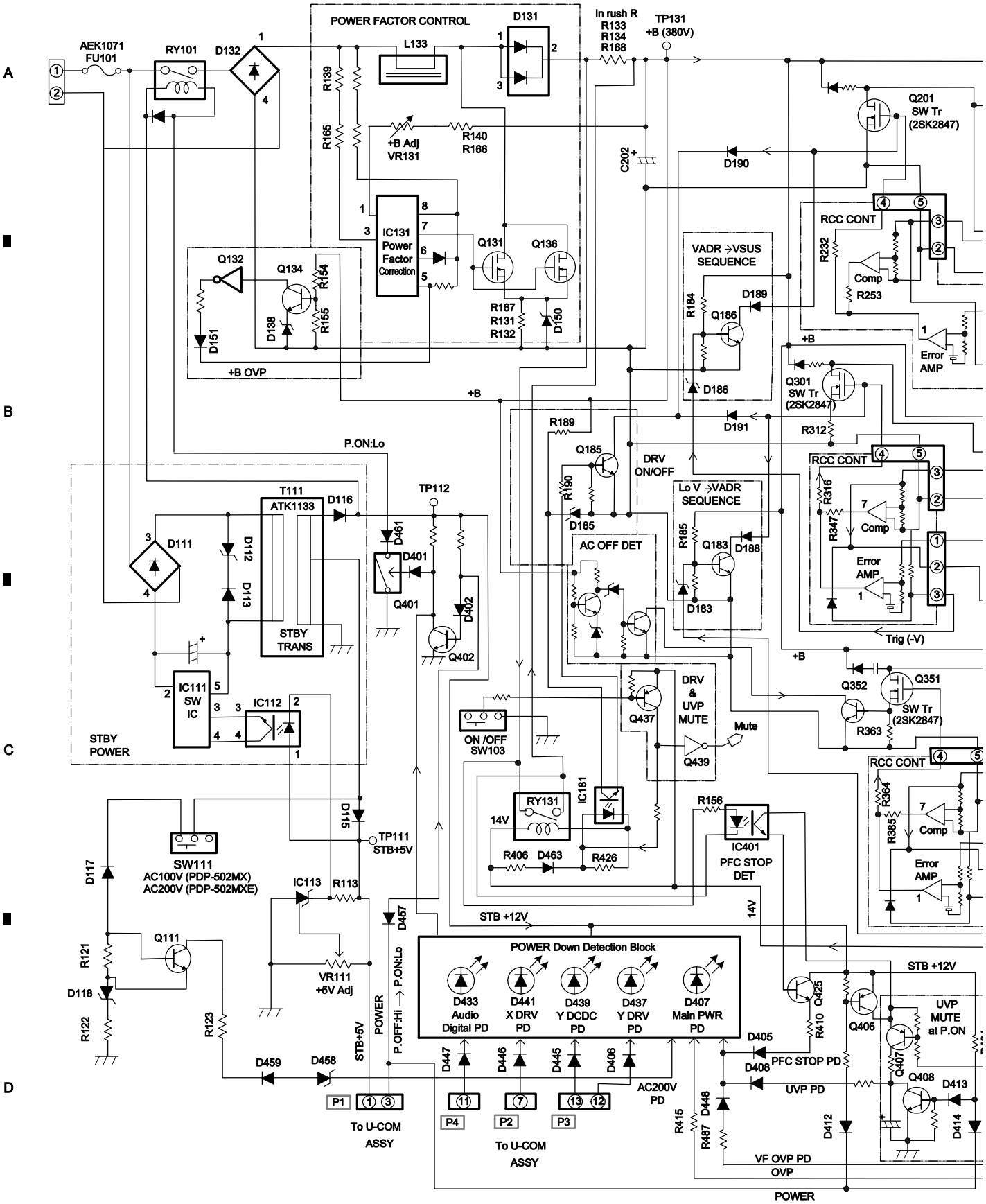

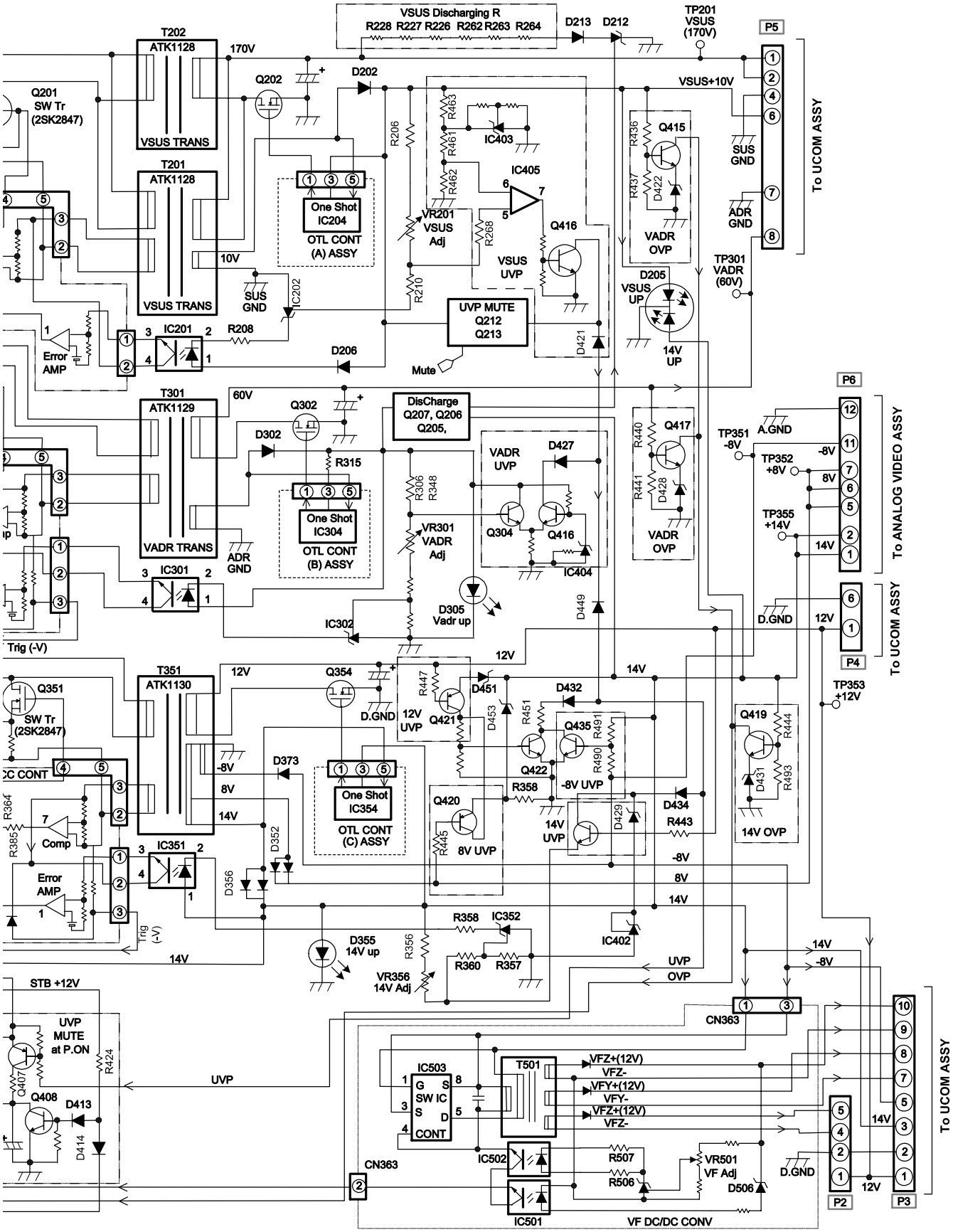
VSUS Discharging R
R228 R227 R226 R262 R263 R264
D213 D212
TP201 VSUS (170V)
P5
T202 ATK1128
170V
Q202
D202
VSUS+10V
Q201 SW Tr (2SK2847)
VSUS TRANS
T201 ATK1128
R206
R463
R461
IC403
R462
IC405
Q415
R436
R437
D422
SUS GND
ADR GND
To UCOM ASSY
One Shot IC204
OTL CONT (A) ASSY
VR201 VSUS Adj
R268
Q416
VSUS UVP
VADR OVP
TP301 VADR (60V)
10V
SUS GND
IC202
R210
D205 VSUS UP
UVP MUTE Q212 Q213
IC201
R208
D421
14V UP
Error AMP
D206
Mute
P6
T301 ATK1129
60V
Q302
DisCharge Q207, Q206 Q205,
Q417
TP351 -8V
A.GND
D302
R315
VADR UVP
D427
R440
R441
D428
TP352 +8V
-8V
8V
To ANALOG VIDEO ASSY
R306
R348
One Shot IC304
OTL CONT (B) ASSY
VR301 VADR Adj
Q304
Q416
VADR OVP
TP355 +14V
14V
VADR TRANS
ADR GND
IC301
IC404
D305 Vadr up
D449
D.GND
12V
To UCOM ASSY
IC302
Trig (-V)
P4
T351 ATK1130
12V
Q354
D.GND
12V UVP
Q421
R447
D451
D453
D432
14V
TP353 +12V
Q351 SW Tr (2SK2847)
R451
Q435
R491
Q419
R444
Q422
R490
-8V UVP
D431
R493
DC CONT
D373
One Shot IC354
OTL CONT (C) ASSY
R358
D434
R364
Comp
Q420
R443
14V UVP
D429
14V OVP
R385
IC351
R445
8V UVP
Error AMP
D352
D356
-8V
8V
14V
Trig (-V)
R358
IC352
IC402
D355 14V up
R356
R360
R357
UVP
OVP
VR356 14V Adj
STB +12V
CN363
UVP MUTE at P.ON
R424
Q407
Q408
D413
D414
UVP
IC503
G SW IC S
S D
CONT
T501
VFZ+(12V)
VFZ-
VFY+(12V)
VFY-
VFZ+(12V)
VFZ-
To UCOM ASSY
IC502
R507
VR501 VF Adj
D.GND
CN363
R506
D506
IC501
VF DC/DC CONV
P2
P3